16. Diagnostics for Engine Starting Failure

A: PROCEDURE

1. Check of the fuel amount
↓
2. Inspection of starter motor circuit <Ref. to EN(H4SO)(diag)-59, STARTER MOTOR CIRCUIT, Diagnostics for Engine Starting Failure.>
↓
3. Inspection of ECM power supply and ground line <Ref. to EN(H4SO)(diag)-62, CHECK POWER SUPPLY AND GROUND LINE OF ENGINE CONTROL MODULE (ECM), Diagnostics for Engine Starting Failure.>
↓
4. Inspection of ignition control system <Ref. to EN(H4SO)(diag)-64, IGNITION CONTROL SYSTEM, Diagnostics for Engine Starting Failure.>
↓
5. Inspection of fuel pump circuit <Ref. to EN(H4SO)(diag)-67, FUEL PUMP CIRCUIT, Diagnostics for Engine Starting Failure.>
↓
6. Inspection of fuel indicator circuit <Ref. to EN(H4SO)(diag)-70, FUEL INJECTOR CIRCUIT, Diagnostics for Engine Starting Failure.>

B: STARTER MOTOR CIRCUIT

CAUTION:
After repairing or replacing the defective parts, perform the Clear Memory Mode <Ref. to EN(H4SO)(diag)-47, OPERATION, Clear Memory Mode.> and Inspection Mode <Ref. to EN(H4SO)(diag)-38, PROCEDURE, Inspection Mode.>.
WIRING DIAGRAM:

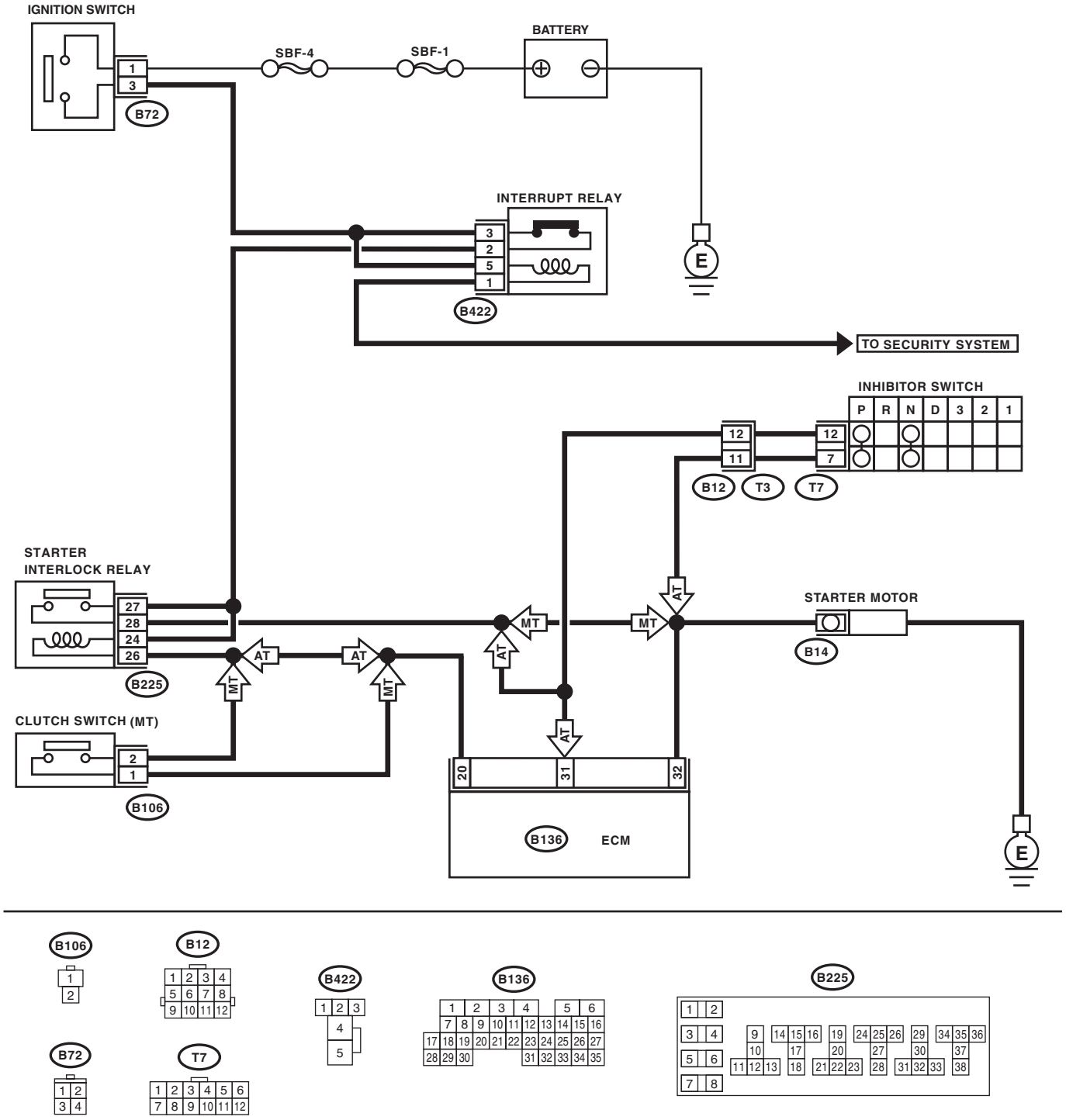

	Step	Check	Yes	No
1	**CHECK BATTERY.** Check the battery voltage.	Is the voltage 12 V or more?	Go to step **2**.	Charge or replace the battery.
2	**CHECK OPERATION OF STARTER MOTOR.**	Does the starter motor operate?	Go to step **3**.	Go to step **4**.
3	**CHECK DTC.**	Is DTC displayed? <Ref. to EN(H4SO)(diag)-37, OPERATION, Read Diagnostic Trouble Code (DTC).>	Check the appropriate DTC using the List of Diagnostic Trouble Code (DTC). <Ref. to EN(H4SO)(diag)-72, List of Diagnostic Trouble Code (DTC).>	Repair poor contact of the ECM connector.
4	**CHECK INPUT SIGNAL FOR STARTER MOTOR.** 1) Turn the ignition switch to OFF. 2) Disconnect the connector from starter motor. 3) Turn the ignition switch to START. 4) Measure the power supply voltage between starter motor connector terminal and engine ground. ***Connector & terminal*** ***(B14) No. 1 (+) — Engine ground (–):*** NOTE: • For AT model, place the select lever in “P” or “N” range. • For MT model, depress the clutch pedal.	Is the voltage 10 V or more?	Check the starter motor. <Ref. to SC(H4SO)-8, Starter.>	Go to step **5**.
5	**CHECK HARNESS BETWEEN BATTERY AND IGNITION SWITCH CONNECTOR.** 1) Disconnect the connector from ignition switch. 2) Measure the power supply voltage between ignition switch connector and chassis ground. ***Connector & terminal*** ***(B72) No. 1 (+) — Chassis ground (–):***	Is the voltage 10 V or more?	Go to step **6**.	Repair the open circuit of harness between ignition switch and battery, and check fuse SBF No. 4 and SBF No. 1.
6	**CHECK IGNITION SWITCH.** 1) Disconnect the connector from ignition switch. 2) Measure the resistance between ignition switch terminals after turning the ignition switch to START position. ***Terminals*** ***(B72) No. 1 — No. 3:***	Is the resistance less than 5 Ω?	Go to step **7**.	Replace the ignition switch.
7	**CHECK INPUT VOLTAGE OF STARTER INTERLOCK RELAY.** 1) Turn the ignition switch to OFF. 2) Disconnect the connector from starter interlock relay. 3) Connect the connector to ignition switch. 4) Measure the input voltage between starter interlock relay connector and chassis ground after turning the ignition switch to START position. ***Connector & terminal*** ***(B225) No. 24 (+) — Chassis ground (–):*** ***(B225) No. 27 (+) — Chassis ground (–):***	Is the voltage 10 V or more?	Go to step **8**.	Repair open or ground short circuit of harness between starter interlock relay and ignition switch. NOTE: Check the security system. (if equipped) <Ref. to SL-21, Security System.>

Step		Check	Yes	No
8	**CHECK STARTER INTERLOCK RELAY.** 1) Using the lead wire, connect the battery (+) to the terminal No. 24 of starter interlock relay, and the battery (–) to the terminal No. 26. 2) Measure the resistance between starter interlock relay terminals. ***Terminals*** ***No. 27 — No. 28:***	Is the resistance less than 1 Ω?	Go to step **9**.	Replace the starter interlock relay.
9	**CHECK TRANSMISSION TYPE.**	Is the transmission type AT?	Go to step **10**.	Go to step **13**.
10	**CHECK INPUT VOLTAGE OF ECM.** 1) Turn the ignition switch to OFF. 2) Connect the starter interlock relay. 3) Disconnect the connectors from the ECM. 4) Measure the input voltage between ECM and chassis ground after turning the ignition switch to START position. ***Connector & terminal*** ***(B136) No. 20 (+) — Chassis ground (–):***	Is the voltage 10 V or more?	Go to step **11**.	Repair the open or ground short circuit of harness between ECM and starter relay.
11	**CHECK INPUT VOLTAGE OF INHIBITOR SWITCH.** 1) Turn the ignition switch to OFF. 2) Connect the connector to ECM. 3) Disconnect the connector from inhibitor switch. 4) Connect the connector to ignition switch. 5) Measure the input voltage between inhibitor switch connector terminal and engine ground after turning the ignition switch to START position. ***Connector & terminal*** ***(B12) No. 12 (+) — Engine ground (–):***	Is the voltage 10 V or more?	Go to step **12**.	Repair the open or ground short circuit of harness between inhibitor switch and starter interlock relay. NOTE: Check the security system. (if equipped) <Ref. to SL-21, Security System.>
12	**CHECK INHIBITOR SWITCH.** 1) Place the select lever in “P” or “N” range. 2) Measure the resistance between inhibitor switch terminals. ***Connector & terminal*** ***(T3) No. 11 — No. 12:***	Is the resistance less than 1 Ω?	Repair the open or ground short circuit of harness between inhibitor switch and starter motor.	Replace the inhibitor switch. <Ref. to 4AT-47, Inhibitor Switch.>
13	**CHECK INPUT VOLTAGE OF ECM.** 1) Turn the ignition switch to OFF. 2) Connect the starter interlock relay. 3) Disconnect the connectors from the ECM. 4) Measure the voltage between ECM and chassis ground with ignition switch in START depressing the clutch pedal. ***Connector & terminal*** ***(B136) No. 20 (+) — Chassis ground (–):***	Is the voltage 10 V or more?	Repair the open circuit of the harness between starter interlock relay and starter motor.	Go to step **14**.
14	**CHECK HARNESS BETWEEN STARTER INTERLOCK RELAY AND CLUTCH SWITCH.** 1) Turn the ignition switch to OFF. 2) Disconnect the connector from starter interlock relay and connector. 3) Measure the resistance of harness between starter interlock relay and clutch switch. ***Connector & terminal*** ***(B225) No. 26 — (B106) No. 2:***	Is the resistance less than 1 Ω?	Go to step **15**.	Repair the open circuit of the harness between starter interlock relay and clutch switch.
15	**CHECK CLUTCH SWITCH.** Measure the resistance between clutch switch terminals while depressing the clutch pedal. ***Terminals*** ***No. 1 — No. 2:***	Is the resistance less than 1 Ω?	Repair the open circuit of harness between the ECM and clutch switch.	Replace the clutch switch. <Ref. to CL-34, Clutch Switch.>

C: CHECK POWER SUPPLY AND GROUND LINE OF ENGINE CONTROL MODULE (ECM)

CAUTION:

After repairing or replacing the defective parts, perform the Clear Memory Mode <Ref. to EN(H4SO)(diag)-47, OPERATION, Clear Memory Mode.> and Inspection Mode <Ref. to EN(H4SO)(diag)-38, PROCEDURE, Inspection Mode.>.

WIRING DIAGRAM:

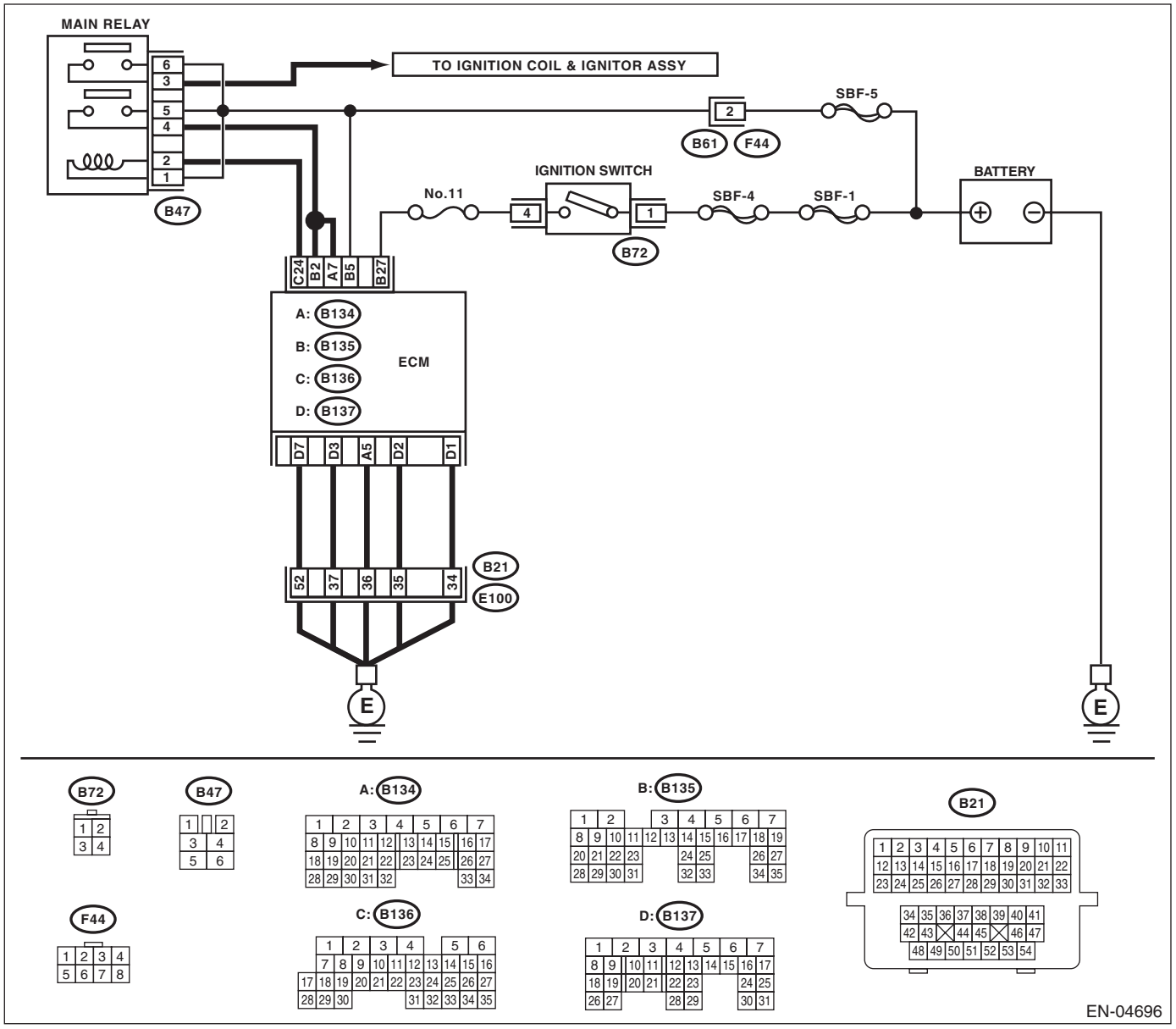

	Step	Check	Yes	No
1	**CHECK MAIN RELAY.** 1) Turn the ignition switch to OFF. 2) Remove the main relay. 3) Using the lead wire, connect the battery (+) to the terminal No. 1 of main relay, and the battery (–) to the terminal No. 2. 4) Measure the resistance between main relay terminals. ***Terminals*** ***No. 3 — No. 6:*** ***No. 4 — No. 5:***	Is the resistance less than 10 Ω?	Go to step **2**.	Replace the main relay.
2	**CHECK GROUND CIRCUIT FOR ECM.** 1) Disconnect the connectors from the ECM. 2) Measure the resistance of harness between ECM and chassis ground. ***Connector & terminal*** ***(B134) No. 5 — Chassis ground:*** ***(B137) No. 1 — Chassis ground:*** ***(B137) No. 2 — Chassis ground:*** ***(B137) No. 3 — Chassis ground:*** ***(B137) No. 7 — Chassis ground:***	Is the resistance less than 5 Ω?	Go to step **3**.	Repair the open circuit of harness or poor contact in the connector between ECM connector and engine grounding terminal.
3	**CHECK INPUT VOLTAGE OF ECM.** 1) Turn the ignition switch to ON. 2) Measure the voltage between ECM connector and chassis ground. ***Connector & terminal*** ***(B135) No. 5 (+) — Chassis ground (–):*** ***(B135) No. 27 (+) — Chassis ground (–):***	Is the voltage 10 V or more?	Go to step **4**.	Repair the open or ground short circuit of power supply circuit.
4	**CHECK INPUT VOLTAGE OF MAIN RELAY.** Measure the voltage between main relay connector and chassis ground. ***Connector & terminal*** ***(B47) No. 1 (+) — Chassis ground (–):*** ***(B47) No. 5 (+) — Chassis ground (–):*** ***(B47) No. 6 (+) — Chassis ground (–):***	Is the voltage 10 V or more?	Go to step **5**.	Repair the open or ground short circuit of harness of power supply circuit.
5	**CHECK INPUT VOLTAGE OF ECM.** 1) Connect the main relay connector. 2) Turn the ignition switch to ON. 3) Measure the voltage between ECM connector and chassis ground. ***Connector & terminal*** ***(B135) No. 2 (+) — Chassis ground (–):*** ***(B134) No. 7 (+) — Chassis ground (–):*** ***(B136) No. 24 (+) — Chassis ground (–):***	Is the voltage 10 V or more?	Check the ignition control system. <Ref. to EN(H4SO)(diag)-64, IGNITION CONTROL SYSTEM, Diagnostics for Engine Starting Failure.>	Repair the open or ground short circuit of harness between ECM connector and main relay connector.

D: IGNITION CONTROL SYSTEM

CAUTION:
After repairing or replacing the defective parts, perform the Clear Memory Mode <Ref. to EN(H4SO)(diag)-47, OPERATION, Clear Memory Mode.> and Inspection Mode <Ref. to EN(H4SO)(diag)-38, PROCEDURE, Inspection Mode.>.
WIRING DIAGRAM:

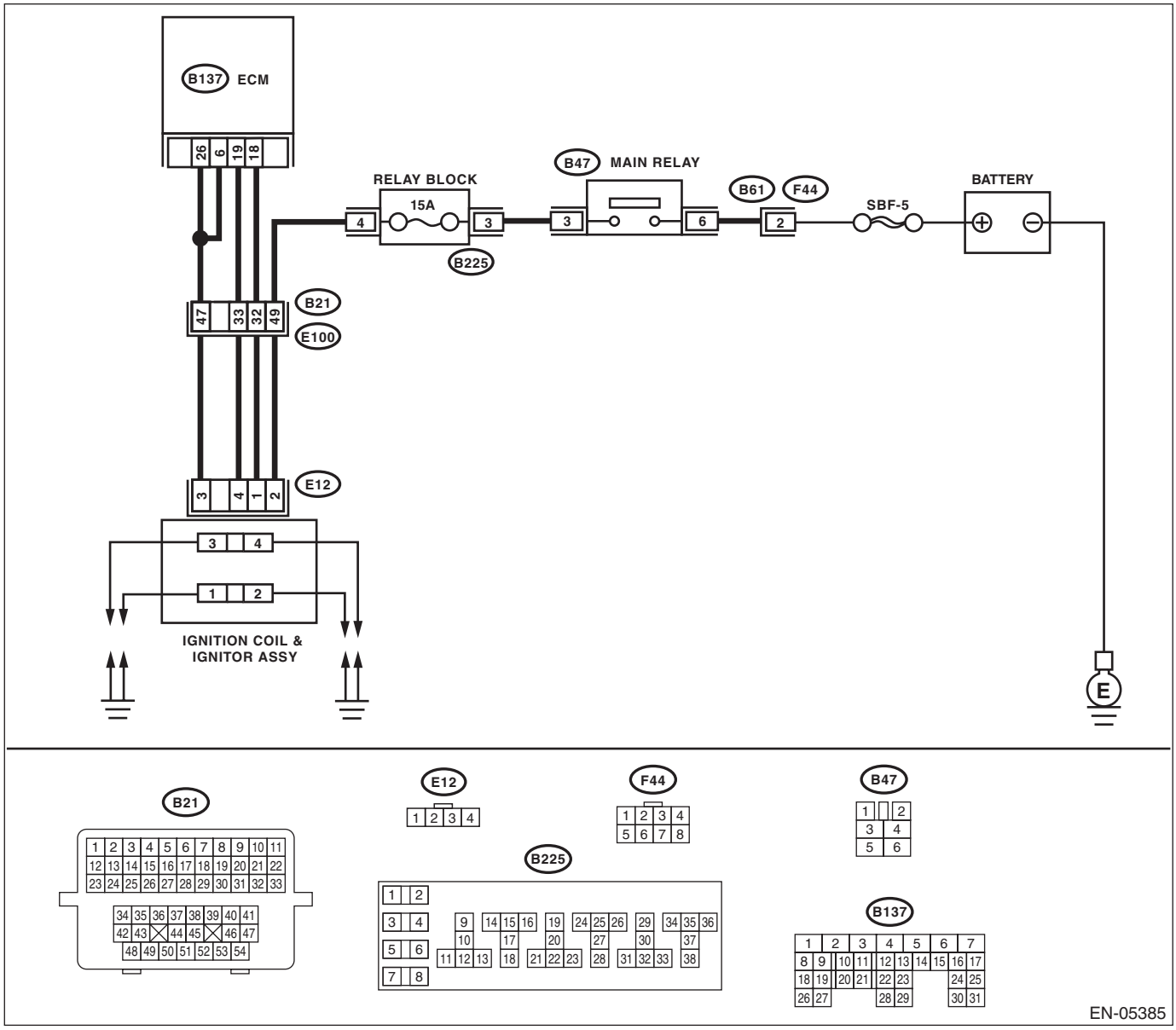

	Step	Check	Yes	No
1	**CHECK IGNITION SYSTEM FOR SPARKS.** 1) Remove the plug cord cap from each spark plug. 2) Install a new spark plug on plug cord cap. **CAUTION:** **Do not remove the spark plug from engine.** 3) Contact the spark plug thread portion to engine. 4) While opening the throttle valve fully, crank the engine to check that spark occurs at each cylinder.	Does spark occur at each cylinder?	Check the fuel pump system. <Ref. to EN(H4SO)(diag)-67, FUEL PUMP CIRCUIT, Diagnostics for Engine Starting Failure.>	Go to step **2**.
2	**CHECK POWER SUPPLY CIRCUIT FOR IGNITION COIL AND IGNITOR ASSEMBLY.** 1) Turn the ignition switch to OFF. 2) Disconnect the connector from the ignition coil and ignitor assembly. 3) Turn the ignition switch to ON. 4) Measure the power supply voltage between ignition coil and ignitor assembly connector and engine ground. ***Connector & terminal*** ***(E12) No. 2 (+) — Engine ground (–):***	Is the voltage 10 V or more?	Go to step **3**.	Repair the harness and connector. NOTE: In this case, repair the following item: • Open circuit of harness between the ignition coil and ignitor assembly, and main relay connector • Poor contact of coupling connector
3	**CHECK HARNESS BETWEEN ECM AND IGNITION COIL AND IGNITOR ASSEMBLY.** 1) Turn the ignition switch to OFF. 2) Disconnect the connectors from the ECM. 3) Measure the resistance of harness between ECM and ignition coil and ignitor assembly connector. ***Connector & terminal*** ***(E12) No. 3 — (B137) No. 6:*** ***(E12) No. 3 — (B137) No. 26:***	Is the resistance less than 5 Ω?	Go to step **4**.	Repair the open circuit of harness between ECM and ignition coil and ignitor assembly connector.
4	**CHECK IGNITION COIL AND IGNITOR ASSEMBLY.** 1) Remove the spark plug cords. 2) Measure the resistance between spark plug cord contact portions to check secondary coil. ***Terminals*** ***No. 1 — No. 2:*** ***No. 3 — No. 4:***	Is the resistance between 10 — 15 kΩ?	Go to step **5**.	Replace the ignition coil and ignitor assembly. <Ref. to IG(H4SO)-6, Ignition Coil and Ignitor Assembly.>
5	**CHECK INPUT SIGNAL FOR IGNITION COIL AND IGNITOR ASSEMBLY.** 1) Connect the connector to the Ignition coil and ignitor assembly. 2) Check if voltage varies synchronously with engine speed when cranking, while monitoring voltage between ignition coil and ignitor assembly connector and engine ground. ***Connector & terminal*** ***(E12) No. 1 (+) — Engine ground (–):*** ***(E12) No. 4 (+) — Engine ground (–):***	Does the voltage vary 10 V or more?	Go to step **6**.	Replace the ignition coil and ignitor assembly. <Ref. to IG(H4SO)-6, Ignition Coil and Ignitor Assembly.>

Step		Check	Yes	No
6	**CHECK HARNESS BETWEEN ECM AND IGNITION COIL AND IGNITOR ASSEMBLY CONNECTOR.** 1) Turn the ignition switch to OFF. 2) Disconnect the connectors from the ECM. 3) Disconnect the connector from the ignition coil and ignitor assembly. 4) Measure the resistance of harness between ECM and ignition coil and ignitor assembly connector. ***Connector & terminal*** ***(B137) No. 18 — (E12) No. 1:*** ***(B137) No. 19 — (E12) No. 4:***	Is the resistance less than 1 Ω?	Go to step **7**.	Repair the harness and connector. NOTE: In this case, repair the following item: • Open circuit in harness between ECM and ignition coil and ignitor assembly connector • Poor contact of coupling connector
7	**CHECK HARNESS BETWEEN ECM AND IGNITION COIL AND IGNITOR ASSEMBLY CONNECTOR.** Measure the resistance of harness between ECM and engine ground. ***Connector & terminal:*** ***(B137) No. 18 — Engine ground:*** ***(B137) No. 19 — Engine ground:***	Is the resistance 1 MΩ or more?	Go to step **8**.	Repair short circuit of the harness to ground between ECM and ignition coil and ignitor assembly connector.
8	**CHECK POOR CONTACT.** Check for poor contact of the ECM connector.	Is there poor contact in ECM connector?	Repair poor contact of the ECM connector.	Check the fuel pump circuit. <Ref. to EN(H4SO)(diag)-67, FUEL PUMP CIRCUIT, Diagnostics for Engine Starting Failure.>

E: FUEL PUMP CIRCUIT

CAUTION:
After repairing or replacing the defective parts, perform the Clear Memory Mode <Ref. to EN(H4SO)(diag)-47, OPERATION, Clear Memory Mode.> and Inspection Mode <Ref. to EN(H4SO)(diag)-38, PROCEDURE, Inspection Mode.>.
WIRING DIAGRAM:

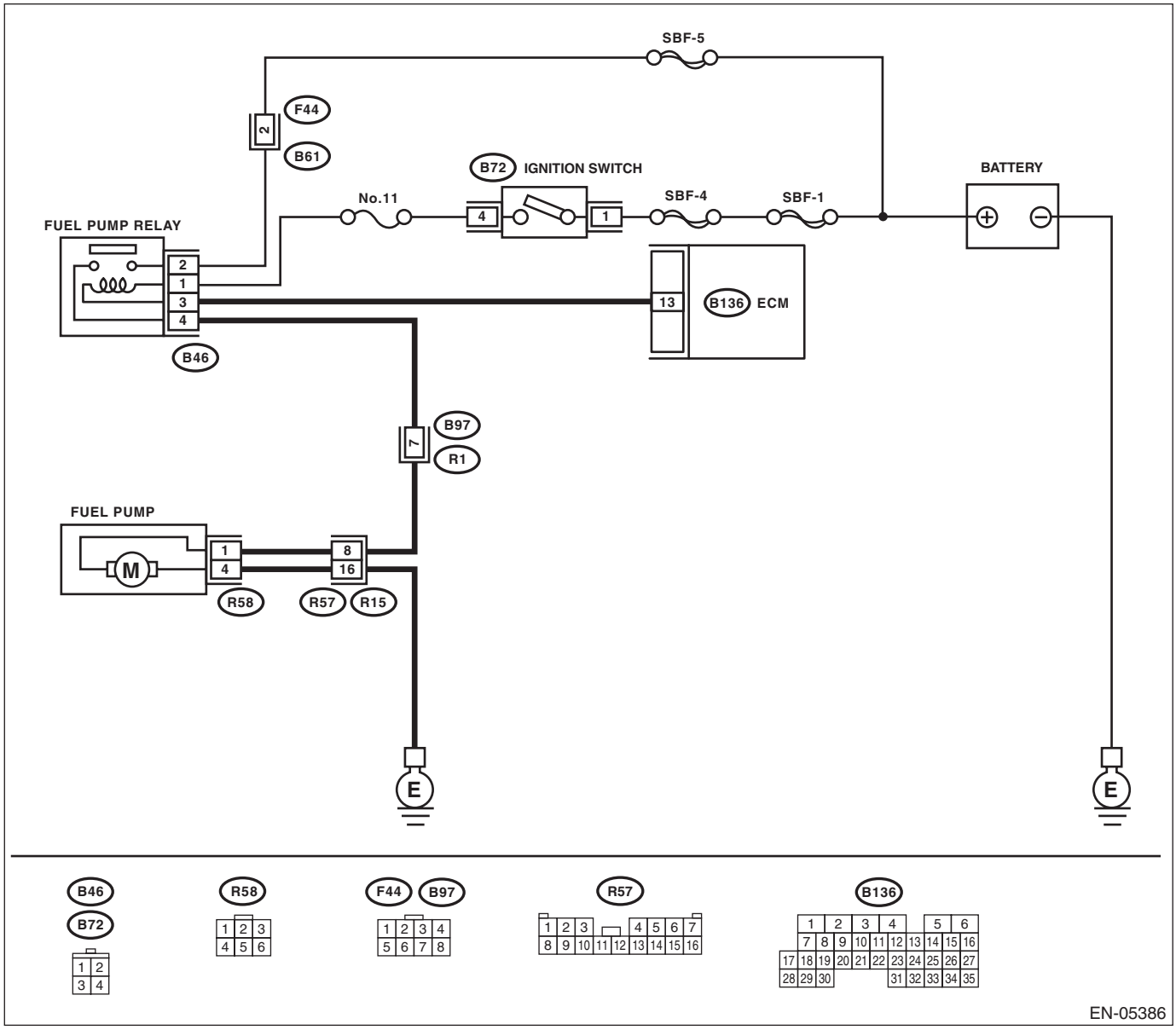

	Step	Check	Yes	No
1	**CHECK OPERATING SOUND OF FUEL PUMP.** Make sure that the fuel pump operates for two seconds when turning the ignition switch to ON. NOTE: Fuel pump operation can be executed using the Subaru Select Monitor. Regarding the procedures, refer to “Compulsory Valve Operation Check Mode”. <Ref. to EN(H4SO)(diag)-48, Compulsory Valve Operation Check Mode.>	Does the fuel pump emit operating sound?	Check the fuel injector circuit. <Ref. to EN(H4SO)(diag)-70, FUEL INJECTOR CIRCUIT, Diagnostics for Engine Starting Failure.>	Go to step **2**.
2	**CHECK GROUND CIRCUIT OF FUEL PUMP.** 1) Turn the ignition switch to OFF. 2) Remove the fuel pump access hole lid. 3) Disconnect the connector from fuel pump. 4) Measure the resistance of harness connector between fuel pump and chassis ground. ***Connector & terminal*** ***(R58) No. 4 — Chassis ground:***	Is the resistance less than 5 Ω?	Go to step **3**.	Repair the harness and connector. NOTE: In this case, repair the following item: • Open circuit in harness between fuel pump connector and chassis grounding terminal • Poor contact of coupling connector
3	**CHECK POWER SUPPLY TO FUEL PUMP.** 1) Turn the ignition switch to ON. 2) Measure the voltage of power supply circuit between fuel pump connector and chassis ground. ***Connector & terminal*** ***(R58) No. 1 (+) — Chassis ground (–):***	Is the voltage 10 V or more?	Replace the fuel pump. <Ref. to FU(H4SO)-51, Fuel Pump.>	Go to step **4**.
4	**CHECK HARNESS BETWEEN FUEL PUMP AND FUEL PUMP RELAY CONNECTOR.** 1) Turn the ignition switch to OFF. 2) Measure the resistance of harness connector between fuel pump and fuel pump relay. ***Connector & terminal*** ***(R58) No. 1 — (B46) No. 4:***	Is the resistance less than 1 Ω?	Go to step **5**.	Repair the harness and connector. NOTE: In this case, repair the following item: • OPEN CIRCUIT OF HARNESS BETWEEN FUEL PUMP AND FUEL PUMP RELAY CONNECTOR. • Poor contact of coupling connector
5	**CHECK HARNESS BETWEEN FUEL PUMP AND FUEL PUMP RELAY CONNECTOR.** Measure the resistance of harness between fuel pump and fuel pump relay connector. ***Connector & terminal*** ***(R58) No. 1 — Chassis ground:***	Is the resistance 1 MΩ or more?	Go to step **6**.	Repair the short circuit of harness between fuel pump and fuel pump relay connector.

Step		Check	Yes	No
6	**CHECK FUEL PUMP RELAY.** 1) Disconnect the connectors from fuel pump relay and main relay. 2) Remove the fuel pump relay and main relay with bracket. 3) Using the lead wire, connect the battery (+) to the terminal No. 1 of fuel pump relay, and the battery (–) to the terminal No. 3. 4) Measure the resistance between connector terminals of fuel pump relay. ***Terminals*** ***No. 2 — No. 4:***	Is the resistance less than 10 Ω?	Go to step **7**.	Replace the fuel pump relay. <Ref. to FU(H4SO)-41, Fuel Pump Relay.>
7	**CHECK HARNESS BETWEEN ECM AND FUEL PUMP RELAY CONNECTOR.** 1) Disconnect the connectors from the ECM. 2) Measure the resistance of harness between ECM and fuel pump relay connector. ***Connector & terminal*** ***(B136) No. 13 — (B46) No. 3:***	Is the resistance less than 1 Ω?	Go to step **8**.	Repair the open circuit of harness between ECM and fuel pump relay connector.
8	**CHECK POOR CONTACT.** Check for poor contact of the ECM connector.	Is there poor contact in ECM connector?	Repair poor contact of the ECM connector.	Check the fuel injector circuit. <Ref. to EN(H4SO)(diag)-70, FUEL INJECTOR CIRCUIT, Diagnostics for Engine Starting Failure.>

F: FUEL INJECTOR CIRCUIT

CAUTION:
- **Check or repair only faulty parts.**
- **After repairing or replacing the defective parts, perform the Clear Memory Mode <Ref. to EN(H4SO)(diag)-47, OPERATION, Clear Memory Mode.> and Inspection Mode <Ref. to EN(H4SO)(diag)-38, PROCEDURE, Inspection Mode.>.**

WIRING DIAGRAM:

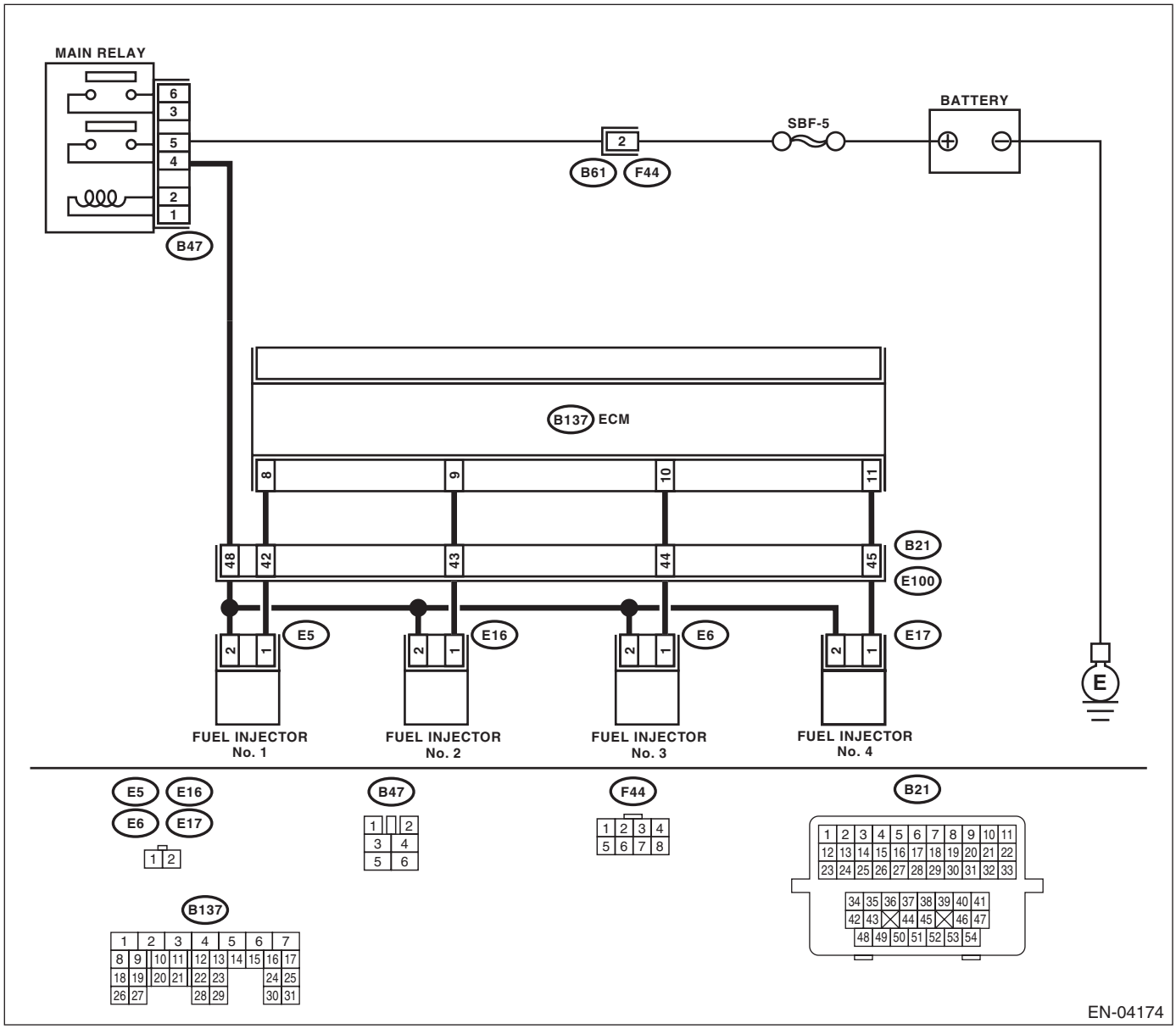

	Step	Check	Yes	No
1	**CHECK OPERATION OF EACH FUEL INJECTOR.** While cranking the engine, check each fuel injector emits operating sound. Use a sound scope or attach a screwdriver to the injector for this check.	Does the fuel injector operate?	Check the fuel pressure. <Ref. to ME(H4SO)-28, INSPECTION, Fuel Pressure.>	Go to step **2**.
2	**CHECK POWER SUPPLY TO EACH FUEL INJECTOR.** 1) Turn the ignition switch to OFF. 2) Disconnect the connector from fuel injector. 3) Turn the ignition switch to ON. 4) Measure the power supply voltage between fuel injector terminal and engine ground. ***Connector & terminal*** ***#1 (E5) No. 2 (+) — Engine ground (–):*** ***#2 (E16) No. 2 (+) — Engine ground (–):*** ***#3 (E6) No. 2 (+) — Engine ground (–):*** ***#4 (E17) No. 2 (+) — Engine ground (–):***	Is the voltage 10 V or more?	Go to step **3**.	Repair the harness and connector. NOTE: In this case, repair the following item: • Open circuit of harness between main relay and fuel injector connector • Poor contact of main relay connector • Poor contact of coupling connector • Poor contact of fuel injector connector
3	**CHECK HARNESS BETWEEN ECM AND FUEL INJECTOR CONNECTOR.** 1) Disconnect the connectors from the ECM. 2) Measure the resistance of harness between ECM and fuel injector connector. ***Connector & terminal*** ***#1 (B137) No. 8 — (E5) No. 1:*** ***#2 (B137) No. 9 — (E16) No. 1:*** ***#3 (B137) No. 10 — (E6) No. 1:*** ***#4 (B137) No. 11 — (E17) No. 1:***	Is the resistance less than 1 Ω?	Go to step **4**.	Repair the harness and connector. NOTE: In this case, repair the following item: • Open circuit of harness between ECM and fuel injector connector • Poor contact of coupling connector
4	**CHECK HARNESS BETWEEN ECM AND FUEL INJECTOR CONNECTOR.** Measure the resistance of harness between ECM and fuel injector connector. ***Connector & terminal*** ***#1 (B137) No. 8 — Chassis ground:*** ***#2 (B137) No. 9 — Chassis ground:*** ***#3 (B137) No. 10 — Chassis ground:*** ***#4 (B137) No. 11 — Chassis ground:***	Is the resistance 1 MΩ or more?	Go to step **5**.	Repair short circuit of the harness to ground between ECM and fuel injector connector.
5	**CHECK EACH FUEL INJECTOR.** 1) Turn the ignition switch to OFF. 2) Measure the resistance between each fuel injector terminals. ***Terminals*** ***No. 1 — No. 2:***	Is the resistance between 5 — 20 Ω?	Go to step **6**.	Replace the faulty fuel injector.
6	**CHECK POOR CONTACT.** Check for poor contact of the ECM connector.	Is there poor contact in ECM connector?	Repair poor contact of the ECM connector.	Inspection using “General Diagnostic Table”. <Ref. to EN(H4SO)(diag)-310, INSPECTION, General Diagnostic Table.>